# SUCTION LINE ACCUMULATORS

Suction Line Accumulators

Suction Line Accumulators With Exchange

## Product introduction ;

Suction line accumulators partially eliminate the backlash risk of the refrigerant to the compressor in liquid form.
"U" pipe is used for maximum refrigerant flow and minimum oil retention.
Suction line accumulator enables the gas in liquid line to cool extremely and the drops in the liquid retainer to evaporate swiftly.
This system includes the following;
Long-lined systems,
Circulation systems,
Heating pumps and defrosting applications.
It is recommended for liquid coolers.

Suction line accumulators are placed between the condenser and the compressor.

Make sure that In & Out indicators on the suction line accumulators are correct.
Suction line accumulators are produced in accordance with the 97/23/EC directive.

# SUCTION LINE ACCUMULATORS

Type A

Technical Data

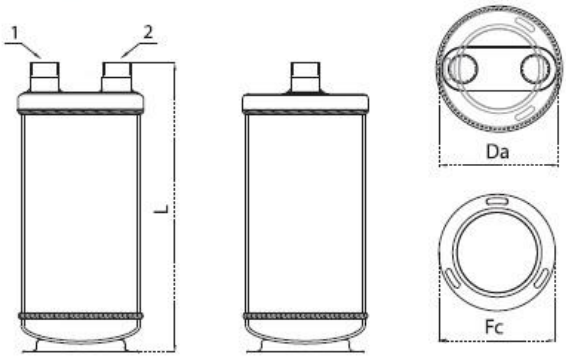


1 Outlet Connection
2 Inlet Connection
3 Exchanger

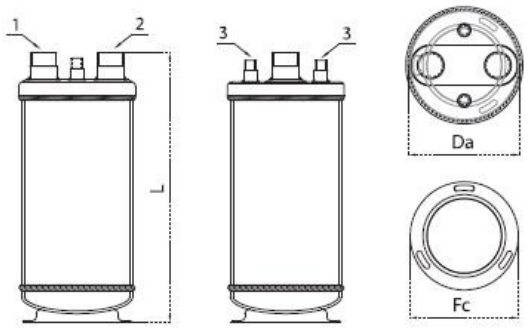


Type B

| Model | Volume Lt. | Dimensions | | | Type | Connection Sizes | | CE | |
|---|---|---|---|---|---|---|---|---|---|
| | | Da (mm) | L (mm) | Fc (mm) | | Inlet / Outlet (Inch) | Inlet / Outlet (Inch) | PED 32 Bar | 97/23/EC 45 Bar |
| | | | | | | Accumulator | H.Exchanger | | |
| SLA-1/2 | 1,7 | Ø 114 | 232 | 135 | A | 1/2" ODS | - | CAT I / A1 | CAT I / A1 |
| SLA-5/8 | | | 232 | | | 5/8" ODS | | | |
| SLA-3/4 | | | 232 | | | 3/4" ODS | | | |
| SLA-7/8 | 3,8 | Ø 140 | 340 | 135 | A | 7/8" ODS | - | | |
| SLAE-7/8-1/2 | | | | | B | | 1/2" ODS | | |
| SLA-1 1/8 | 5,1 | Ø 140 | 420 | 135 | A | 1 1/8" ODS | - | CAT II / A1 | CAT II / A1 |
| SLAE-1 1/8-1/2 | | | | | B | | 1/2" ODS | | |
| SLA-1 3/8 | 8,1 | Ø 165 | 470 | 161 | A | 1 3/8" ODS | - | | |
| SLAE-1 3/8-1/2 | | | | | B | | 1/2" ODS | | |
| SLA-1 5/8 | 8,1 | Ø 165 | 475 | 161 | A | 1 5/8" ODS | - | | |
| SLAE-1 5/8-1/2 | | | | | B | | 1/2" ODS | | |
| SLA-2 1/8 | 13,5 | Ø 219 | 520 | 249 | A | 2 1/8" ODS | - | | |
| SLAE-2 1/8-5/8 | | | | | B | | 5/8" ODS | | |
| SLA-2 5/8 | 22,3 | Ø 273 | 550 | 249 | A | 2 5/8" ODS | - | | |
| SLAE-2 5/8-3/4 | | | | | B | | 3/4" ODS | | |
| SLAE-3 1/8 | 35,2 | Ø 324 | 620 | 320 | A | 3 1/8" ODS | - | CAT III B+C1 | CAT III B+C1 |
| SLAE-3 1/8-7/8 | | | | | B | | 7/8" ODS | | |
| SLA-4 1/8 | 72,5 | Ø 406 | 880 | 430 | A | 4 1/8" ODS | - | | CAT IV B+D |
| SLAE-4 1/8-7/8 | | | | | B | | 7/8" ODS | | |

# SUCTION LINE ACCUMULATORS

| Model | Refrigeration Holding Capacity (kg at-18°C) | | | M | Recommended kW of refrigerant at suction Evaporating Temp (°C) | | | | | | | | | | | | | | |
|---|---|---|---|---|---|---|---|---|---|---|---|---|---|---|---|---|---|---|---|
| | | | | | R134a | | | | | R22 | | | | | R404A /R507 | | | | |
| | R134a | R22 | R404A | | +5° | -7° | -18° | -29° | -40° | +5° | -7° | -18° | -29° | -40° | +5° | -7° | -18° | -29° | -40° |
| SLA-1/2 | 1,2 | 1,1 | 1,2 | Max. | 2,50 | 1,50 | 0,90 | 0,50 | 0,30 | 3,80 | 2,20 | 1,60 | 0,90 | 0,55 | 3,80 | 2,20 | 1,60 | 0,90 | 0,55 |
| | | | | Min. | 0,45 | 0,35 | 0,28 | 0,20 | 0,16 | 0,70 | 0,58 | 0,45 | 0,38 | 0,28 | 0,70 | 0,58 | 0,45 | 0,38 | 0,28 |
| SLA-5/8 | 1,4 | 1,3 | 1,4 | Max. | 4,50 | 2,90 | 1,90 | 0,90 | 0,50 | 6,90 | 4,20 | 2,80 | 1,70 | 1,00 | 6,90 | 4,20 | 2,80 | 1,70 | 1,00 |
| | | | | Min. | 0,80 | 0,60 | 0,40 | 0,35 | 0,23 | 1,20 | 0,95 | 0,80 | 0,63 | 0,46 | 1,20 | 0,95 | 0,80 | 0,63 | 0,46 |
| SLA-3/4 | 1,6 | 1,5 | 1,6 | Max. | 8,00 | 5,20 | 3,10 | 1,80 | 1,10 | 13,00 | 8,00 | 5,00 | 3,00 | 1,90 | 13,00 | 8,00 | 5,00 | 3,00 | 1,90 |
| | | | | Min. | 1,30 | 1,00 | 0,80 | 0,60 | 0,40 | 2,00 | 1,80 | 1,40 | 1,10 | 0,80 | 2,00 | 1,80 | 1,40 | 1,10 | 0,80 |
| SLA-7/8 | 3,2 | 3,1 | 3,2 | Max. | 10,20 | 6,70 | 4,00 | 2,30 | 1,30 | 17,00 | 11,00 | 7,00 | 4,20 | 2,40 | 17,00 | 11,00 | 7,00 | 4,20 | 2,40 |
| | | | | Min. | 1,80 | 1,40 | 1,00 | 0,75 | 0,50 | 2,50 | 2,00 | 1,80 | 1,40 | 1,00 | 2,50 | 2,00 | 1,80 | 1,40 | 1,00 |
| SLAE-7/8-1/2 | 3,2 | 3,1 | 3,2 | Max. | 10,20 | 6,70 | 4,00 | 2,30 | 1,30 | 17,00 | 11,00 | 7,00 | 4,20 | 2,40 | 17,00 | 11,00 | 7,00 | 4,20 | 2,40 |
| | | | | Min. | 1,80 | 1,40 | 1,00 | 0,75 | 0,50 | 2,50 | 2,00 | 1,80 | 1,40 | 1,00 | 2,50 | 2,00 | 1,80 | 1,40 | 1,00 |
| SLA-1 1/8 | 4,3 | 4,2 | 4,3 | Max. | 19,00 | 12,00 | 7,00 | 4,50 | 2,10 | 29,00 | 19,00 | 12,00 | 7,00 | 4,00 | 29,00 | 19,00 | 12,00 | 7,00 | 4,00 |
| | | | | Min. | 2,70 | 2,10 | 1,00 | 1,20 | 0,80 | 4,00 | 3,10 | 2,80 | 2,20 | 1,60 | 4,00 | 3,10 | 2,80 | 2,20 | 1,60 |
| SLAE-1 1/8-1/2 | 4,3 | 4,2 | 4,3 | Max. | 19,00 | 12,00 | 7,00 | 4,50 | 2,10 | 29,00 | 19,00 | 12,00 | 7,00 | 4,00 | 29,00 | 19,00 | 12,00 | 7,00 | 4,00 |
| | | | | Min. | 2,70 | 2,10 | 1,00 | 1,20 | 0,80 | 4,00 | 3,10 | 2,80 | 2,20 | 1,60 | 4,00 | 3,10 | 2,80 | 2,20 | 1,60 |
| SLA-1 3/8 | 6,2 | 6,1 | 6,2 | Max. | 42,00 | 27,00 | 16,00 | 9,00 | 4,90 | 65,00 | 42,00 | 27,00 | 17,00 | 10,00 | 65,00 | 42,00 | 27,00 | 17,00 | 10,00 |
| | | | | Min. | 5,50 | 4,40 | 3,30 | 2,70 | 1,80 | 8,40 | 7,00 | 6,00 | 4,60 | 3,40 | 8,40 | 7,00 | 6,00 | 4,60 | 3,40 |
| SLAE-1 3/8-1/2 | 6,2 | 6,1 | 6,2 | Max. | 42,00 | 27,00 | 16,00 | 9,00 | 4,90 | 65,00 | 42,00 | 27,00 | 17,00 | 10,00 | 65,00 | 42,00 | 27,00 | 17,00 | 10,00 |
| | | | | Min. | 5,50 | 4,40 | 3,30 | 2,70 | 1,80 | 8,40 | 7,00 | 6,00 | 4,60 | 3,40 | 8,40 | 7,00 | 6,00 | 4,60 | 3,40 |
| SLA-1 5/8 | 7,1 | 6,8 | 7,1 | Max. | 61,00 | 38,00 | 22,00 | 12,00 | 7,00 | 93,00 | 62,00 | 38,00 | 24,00 | 15,00 | 93,00 | 62,00 | 38,00 | 24,00 | 15,00 |
| | | | | Min. | 7,50 | 6,00 | 4,60 | 3,20 | 2,20 | 12,00 | 9,50 | 8,00 | 6,30 | 4,80 | 12,00 | 9,50 | 8,00 | 6,30 | 4,80 |
| SLAE-1 5/8-1/2 | 7,1 | 6,8 | 7,1 | Max. | 61,00 | 38,00 | 22,00 | 12,00 | 7,00 | 93,00 | 62,00 | 38,00 | 24,00 | 15,00 | 93,00 | 62,00 | 38,00 | 24,00 | 15,00 |
| | | | | Min. | 7,50 | 6,00 | 4,60 | 3,20 | 2,20 | 12,00 | 9,50 | 8,00 | 6,30 | 4,80 | 12,00 | 9,50 | 8,00 | 6,30 | 4,80 |
| SLA-2 1/8 | 13,3 | 12,9 | 13,3 | Max. | 112,00 | 75,00 | 43,00 | 26,00 | 14,00 | 190,00 | 120,00 | 75,00 | 48,00 | 29,00 | 190,00 | 120,00 | 75,00 | 48,00 | 29,00 |
| | | | | Min. | 14,00 | 11,00 | 9,00 | 6,50 | 4,20 | 21,00 | 18,00 | 15,00 | 12,00 | 8,80 | 21,00 | 18,00 | 15,00 | 12,00 | 8,80 |
| SLAE-2 1/8-5/8 | 13,3 | 12,9 | 13,3 | Max. | 112,00 | 75,00 | 43,00 | 26,00 | 14,00 | 190,00 | 120,00 | 75,00 | 48,00 | 29,00 | 190,00 | 120,00 | 75,00 | 48,00 | 29,00 |
| | | | | Min. | 14,00 | 11,00 | 9,00 | 6,50 | 4,20 | 21,00 | 18,00 | 15,00 | 12,00 | 8,80 | 21,00 | 18,00 | 15,00 | 12,00 | 8,80 |
| SLA-2 5/8 | 21,6 | 21,1 | 21,6 | Max. | 195,00 | 125,00 | 71,00 | 42,00 | 22,00 | 300,00 | 200,00 | 125,00 | 75,00 | 44,00 | 300,00 | 200,00 | 125,00 | 75,00 | 44,00 |
| | | | | Min. | 22,00 | 18,00 | 14,00 | 10,00 | 5,80 | 32,00 | 29,00 | 22,00 | 18,00 | 14,00 | 32,00 | 29,00 | 22,00 | 18,00 | 14,00 |
| SLAE-2 5/8-3/4 | 21,6 | 21,1 | 21,6 | Max. | 195,00 | 125,00 | 71,00 | 42,00 | 22,00 | 300,00 | 200,00 | 125,00 | 75,00 | 44,00 | 300,00 | 200,00 | 125,00 | 75,00 | 44,00 |
| | | | | Min. | 22,00 | 18,00 | 14,00 | 10,00 | 5,80 | 32,00 | 29,00 | 22,00 | 18,00 | 14,00 | 32,00 | 29,00 | 22,00 | 18,00 | 14,00 |
| SLA-3 1/8 | 32,0 | 31,5 | 32,0 | Max. | 285,00 | 180,00 | 110,00 | 55,00 | 34,00 | 450,00 | 280,00 | 190,00 | 110,00 | 65,00 | 450,00 | 280,00 | 190,00 | 110,00 | 65,00 |
| | | | | Min. | 31,00 | 24,00 | 19,00 | 15,00 | 9,70 | 48,00 | 40,00 | 32,00 | 25,00 | 18,00 | 48,00 | 40,00 | 32,00 | 25,00 | 18,00 |
| SLAE-3 1/8-7/8 | 32,0 | 31,5 | 32,0 | Max. | 285,00 | 180,00 | 110,00 | 55,00 | 34,00 | 450,00 | 280,00 | 190,00 | 110,00 | 65,00 | 450,00 | 280,00 | 190,00 | 110,00 | 65,00 |
| | | | | Min. | 31,00 | 24,00 | 19,00 | 15,00 | 9,70 | 48,00 | 40,00 | 32,00 | 25,00 | 18,00 | 48,00 | 40,00 | 32,00 | 25,00 | 18,00 |
| SLA-4 1/8 | 62,4 | 60,2 | 62,4 | Max. | 380,00 | 240,00 | 150,00 | 80,00 | 45,00 | 600,00 | 400,00 | 250,00 | 150,00 | 90,00 | 600,00 | 400,00 | 250,00 | 150,00 | 90,00 |
| | | | | Min. | 40,00 | 31,00 | 24,00 | 18,00 | 12,00 | 60,00 | 52,00 | 41,00 | 33,00 | 25,00 | 60,00 | 52,00 | 41,00 | 33,00 | 25,00 |
| SLAE-4 1/8-7/8 | 62,4 | 60,2 | 62,4 | Max. | 380,00 | 240,00 | 150,00 | 80,00 | 45,00 | 600,00 | 400,00 | 250,00 | 150,00 | 90,00 | 600,00 | 400,00 | 250,00 | 150,00 | 90,00 |
| | | | | Min. | 40,00 | 31,00 | 24,00 | 18,00 | 12,00 | 60,00 | 52,00 | 41,00 | 33,00 | 25,00 | 60,00 | 52,00 | 41,00 | 33,00 | 25,00 |

# FOOT CONNECTIONS

Technical Data

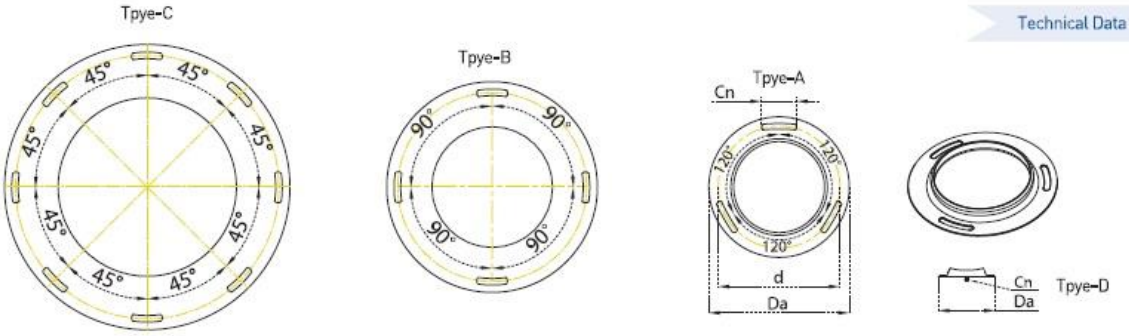


| Model | Dimensions | | Connection | Type |
|---|---|---|---|---|
| | Da (mm) | d (mm) | Cn (mm) | |
| VFC-130 | Ø 130 | - | M8 | D |
| VFC-135 | Ø 135 | Ø 107 | 30*8 | A |
| VFC-161 | Ø 161 | Ø 153 | 30*8 | A |
| VFC-182 | Ø 182 | Ø 166 | 30*13 | A |
| VFC-249 | Ø 249 | Ø 214 | 60*13 | A |
| VFC-320 | Ø 320 | Ø 277 | 80*13 | A |
| VFC-430 | Ø 430 | Ø 380 | 70*15 | B |
| VFC-480 | Ø 480 | Ø 430 | 70*15 | B |
| VFC-550 | Ø 550 | Ø 500 | 70*15 | B |
| VFC-650 | Ø 650 | Ø 600 | 70*15 | C |

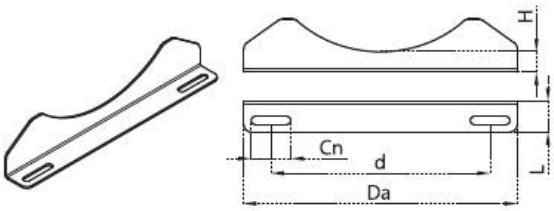


| Model | Dimensions | | | Connection |
|---|---|---|---|---|
| | Da (mm) | d (mm) | L | Cn (mm) |
| HFC-135 | 135 | 175 | 40 | 40*10 |
| HFC-155 | 155 | 95 | 40 | 40*10 |
| HFC-175 | 175 | 115 | 40 | 40*10 |
| HFC-240 | 240 | 180 | 40 | 40*10 |
| HFC-300 | 300 | 230 | 40 | 50*10 |
| HFC-350 | 350 | 280 | 40 | 50*10 |
| HFC-450 | 450 | 360 | 60 | 60*15 |
| HFC-500 | 500 | 410 | 60 | 60*15 |
| HFC-550 | 550 | 460 | 60 | 60*15 |
| HFC-650 | 650 | 560 | 80 | 60*15 |